Gas Analysis

Sample gas pumps

P1.1, P1.1E

Installation and Operation Instructions

Original instructions

BE420020
03/2020

Bühler Technologies GmbH, Harkortstr. 29, D-40880 Ratingen
Tel. +49 (0) 21 02 / 49 89-0, Fax: +49 (0) 21 02 / 49 89-20
E-Mail: analyse@buehler-technologies.com
Internet: www.buehler-technologies.com

Bühler Technologies GmbH, Harkortstr. 29, D-40880 Ratingen
Tel. +49 (0) 21 02 / 49 89-0, Fax: +49 (0) 21 02 / 49 89-20
Internet: www.buehler-technologies.com
E-Mail: analyse@buehler-technologies.com

Read this instruction carefully prior to installation and/or use. Pay attention particularly to all advises and safety instructions to prevent injuries. Bühler Technologies can not be held responsible for misusing the product or unreliable function due to unauthorised modifications.

Document information
Document No..... BE420020
Version..... 03/2020

Contents

1 Introduction

1.1 Intended use

The sample gas pumps are intended to be installed in gas analysis systems in industrial applications. Sample gas pumps of the P1.1 type must be installed in a housing / equipment cabinet or provided with protection against accidental contact. The P1.1E types come provided with a factory-made housing.

The sample gas pump is intended exclusively for the pumping of gaseous media. It is not suitable for liquids.

Please note the specifications in the data sheet on the specific intended use, existing material combinations, as well as pressure and temperature limits.

DANGER	**Potentially explosive atmosphere**
	Explosion hazard if used in hazardous areas. The device is not suitable for operation in hazardous areas with potentially explosive atmospheres. Do not expose the device to combustible or explosive gas mixtures.

1.2 Product key

The device is delivered with different configurations. The part number given on the type plate informs you about the specific configuration of your device.

On the type plate you will find the order number as well as the 13-digit product key. This number is a code where each digit (x) describes a certain feature:

42	28	x	x	x	1	x	x	x	00	xx	Product feature
											Motor voltage
		1									230 V 50 Hz 0.48 A
		2									115 V 60 Hz 0.84 A
		3									12 V DC 1.55 A (on request)
		4									24 V DC 0.8 A
											Pump head position
			1								Normal position vertical
			2								turned by 180°
											Pump head material
				1							PTFE
				2							VA (1.4571)
				3							PVDF with bypass valve
				4							PVDF
											Valve material
					1						up to 70 °C; PTFE/PVDF
											Screw-in connections/pipe fittings
						0					without
						1					PVDF DN 4/6 *
						2					PVDF 1/4”-1/6” *
						3					PVDF 1/4"-1/8" *
						5					VA (1.4401) 6 mm **
						6					VA (1.4401) 1/4" **
											Mounting accessories
							0				without
							1				Mounting bracket and set of vibration dampers
							2				set of vibration dampers only
											Housing
								0			without
								1			Housing incl. 3 m connection cable
								2			Housing with on/off switch incl. 3 m connection cable ***
											Options
									00		without
											Approval
										--	without
										FM	FM-Approval

* PTFE or PVDF pump body only

** VA pump body only

*** not possible with 12V/24V and/or FM approval

If there are special instructions for a pump type, they are marked in the manual.

Take care of the limits of the pump. When ordering spare parts chose for the type matching part numbers (e.g. valves).

1.3 Scope of delivery

- 1 x Sample gas pump with motor
- Product documentation
- Connection- and mounting accessories (only optional)

For logistics reasons, connection- or mounting accessories such as screw-in connections and/or mounting bracket are not factory installed!

1.4 Product description

The sample gas pump is designed to transport only gaseous media not liquids.

Please observe the information at the end of these instructions in relation to specific intended use, available materials, pressure and temperature ranges. Regard in particular the information and type of protection given on the type plate.

Sample gases, which still contain humidity, tend to form condensate in the tubes and in the pump body. In such cases the pump head must be mounted with the head pointing down (see chapter Conversion to pump body pointing down).

NOTICE

Never use sample gas pumps outdoors!

2 Safety instructions

2.1 Important advice

Operation of the device is only permitted if:

- the product is used under the conditions described in the installation- and operation instruction, the intended application according to the type plate and the intended use. In case of unauthorized modifications done by the user Bühler Technologies GmbH can not be held responsible for any damage,
- when complying with the specifications and markings on the nameplates.
- the performance limits given in the datasheets and in the installation- and operation instruction are obeyed,
- monitoring devices and safety devices are installed properly,
- service and repair is carried out by Bühler Technologies GmbH,
- only original spare parts are used.

This manual is part of the equipment. The manufacturer keeps the right to modify specifications without advanced notice. Keep this manual for later use.

Signal words for warnings

DANGER	Signal word for an imminent danger with high risk, resulting in severe injuries or death if not avoided.
WARNING	Signal word for a hazardous situation with medium risk, possibly resulting in severe injuries or death if not avoided.
CAUTION	Signal word for a hazardous situation with low risk, resulting in damaged to the device or the property or minor or medium injuries if not avoided.
NOTICE	Signal word for important information to the product.

Warning signs

In this manual, the following warning signs are used:

	Warning against hazardous situations		General notice
	Warning against electrical voltage		Disconnect from mains
	Warning against respiration of toxic gases		Wear respirator
	Warning against acid and corrosive substances		Wear eye/face protection
	Warning against potentially explosive atmospheres		Wear protection gloves
	Warning against hot surface		

2.2 General indication of risk

The equipment must be installed by a professional familiar with the safety requirements and risks.

Be sure to observe the safety regulations and generally applicable rules of technology relevant for the installation site. Prevent malfunctions and avoid personal injuries and property damage.

The operator of the system must ensure:

- Safety notices and operating instructions are available and observed,
- The respective national accident prevention regulations are observed,
- The permissible data and operational conditions are maintained,
- Safety guards are used and mandatory maintenance is performed,
- Legal regulations are observed during disposal,
- compliance with national installation regulations.

Maintenance, Repair

Please note during maintenance and repairs:

- Repairs to the unit must be performed by Bühler authorised personnel.
- Only perform conversion-, maintenance or installation work described in these operating and installation instructions.
- Always use genuine spare parts.
- Do not install damaged or defective spare part. If necessary, visually inspect prior to installation to determine any obvious damage to the spare parts.

Always observe the applicable safety and operating regulations in the respective country of use when performing any type of maintenance.

DANGER

Electrical voltage

Electrocution hazard.

a) Disconnect the device from power supply.

b) Make sure that the equipment cannot be reconnected to mains unintentionally.

c) The device must be opened by trained staff only.

d) Regard correct mains voltage.

DANGER

Toxic, corrosive gases

The measuring gas led through the equipment can be hazardous when breathing or touching it.

a) Check tightness of the measuring system before putting it into operation.

b) Take care that harmful gases are exhausted to a save place.

c) Before maintenance turn off the gas supply and make sure that it cannot be turned on unintentionally.

d) Protect yourself during maintenance against toxic / corrosive gases. Use suitable protective equipment.

DANGER

Potentially explosive atmosphere

Explosion hazard if used in hazardous areas.
The device is not suitable for operation in hazardous areas with potentially explosive atmospheres.
Do not expose the device to combustible or explosive gas mixtures.

CAUTION	**Tipping hazard**
	Equipment damage. Secure the device against tipping, sliding and falling.

CAUTION	**Hot surface**
	Burning hazard According to the product type and operation conditions, the temperature may exceed 50 °C during operation. Depending on the conditions at the installation site it may be necessary to provide these areas with appropriate warning signs.

3 Transport and storage

The products should be transported only in its original packaging or a suitable replacement.

When not in use, protect the equipment against moisture and heat. Keep it in a covered, dry and dust-free room at a temperature of -20 °C to +40 °C.

Outdoor storage is **forbidden**. As a matter of principle, the operator must regard all applicable standards according prevention of damage due to lightning, which may otherwise damage the sample gas pump.

The storage room must not be equipped with any ozone-producing devices like fluorescent light sources, mercury arc lamps, electric high voltage devices.

4 Installation and connection

Remove any transport locks on the fan blade and check the equipment for damage prior to installation. This could be a damaged housing, supply cables, etc., among other things. Never use equipment with obvious damage.

4.1 Requirements to the installation site

CAUTION

Damage to the device

Protect the equipment against dust, falling objects and external impacts.

Stroke of lightning

Outdoor installation is **forbidden**. As a matter of principle, the operator must regard all applicable standards according prevention of damage due to lightning, which may otherwise damage the device.

The sample gas pumps are built-in units which may only be safely operated inside a housing providing adequate protection for persons against touching live or moving parts (fans). Water and contaminants must also be prevented from entering. The P1.1E sample gas pumps offers protection from direct contact with an IP20 rating. Depending on the operating and ambient conditions, the required protection may vary and must be taken into account during installation.

Never block the vent, and the exhaust air – including from adjacent units – must not be immediately suctioned in.

The motor is rated for ambient temperatures of 0 °C to +50 °C as well as installation altitudes ≤ 1000 m above sea level.

Please refer to chapter "Appendix" at the end of the operating and installation instructions for additional installation site ambient parameters.

4.2 Installation

Use suitable rubber-metal buffers when installing to mounting plates. We recommend buffers with a diameter or 10 mm, a height of 10 mm and a shore hardness of 70. These are also available from us.

The base angle of the sample gas pump features 4x M4 tapped holes for mounting the buffers. Suitable buffers and assembly brackets are accessories which may be ordered separately from us.

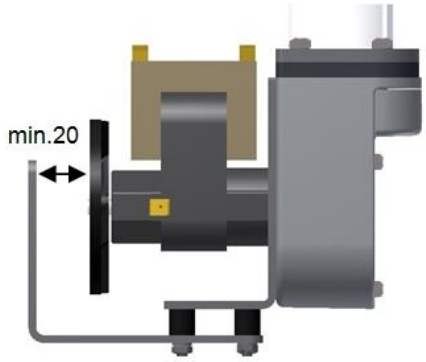

While installing the sample gas pump, there must be sufficient spacing between the motor and the rear wall (20mm).

If you are using a sample gas pump with housing (type P1.1E), the required distance between the housing and the rear wall is 50mm. This is due to the minimum permitted bending radius of the power supply line.

The specific mounting bracket for the various product variants can be obtained as an accessory. Using the appropriate mounting bracket guarantees the correct distance between the device and the rear wall.

4.3 Special condition moist sample gas

Applications where the sample gas is still moist may result in condensate forming in line and the pump body. In these events the pump head must be suspended (pump body facing down).

If the pump was not ordered this way, it can easily be converted on site.

Install the line between the gas output and condensate drain with a grade so the condensate can drain and does not collect inside the pump or the lines.

4.3.1 Conversion to pump body pointing down

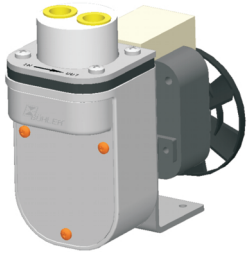

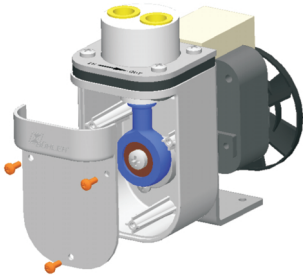

Loosen the 3 Torx screws (M3x8) on the front cover (Torx T10).

Remove the cover.

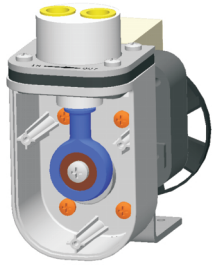

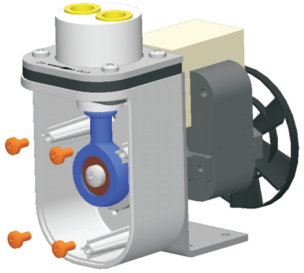

Loosen and remove the 4 Torx screws (M4x6) on the console (Torx T20).

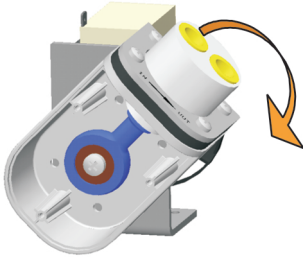

Carefully turn the pump unit 180°.

Then reinstall the 4 Torx screws and tighten to 3 Nm.

Before tightening the screws be sure the pump unit is centered in the base angle.

Now reinstall the front cover and secure using the 3 M3x8 Torx screws.

4.4 Connecting gas lines

The G1/4 female threads for the respective screw-in connections are factory closed with plastic plugs to protect from dirt. Screw-in connections are generally not included in delivery, but are sold separately for metric or for imperial installation.

Avoid mixed-material installation, i.e. metal piping to plastic bodies. If this cannot be avoided in isolated applications, screw the metal connections into the pump body with care, never use force.

Lay the lines so the line at the inlet and outlet remains flexible for an adequate distance.

The pumps are marked **IN** for inlet and **OUT** for outlet at the mounting ring. Be sure the gas line connections are tight.

4.5 Electrical connections

WARNING **Hazardous electrical voltage**

The device must be installed by trained staff only.

CAUTION **Wrong mains voltage**

Wrong mains voltage may damage the device.
Regard the correct mains voltage as given on the type plate.

A switch or circuit breaker (in accordance with IEC 60947-1 and IEC 60947-3) is to be provided. This must be organized to be easily accessible for the operator. The switch must be labelled as an isolating device for the unit. It must not be inserted into a mains power line or interrupt the protective conductor. Furthermore, the switch must separate the sample gas pump from the live parts for all the poles.

The sample gas pump must be secured against unacceptable excessive warming by using a suitable overload protection (motor protection circuit breaker). Sample gas pumps with a BLDC motor have already integrated protection against excessive warming in the motor electronics.

Observe the rated current for the protective switch (230 V = 0,48 A, 115 V = 0,84 A, 12 V DC = 1,55 A, 24 V DC = 0,8 A).

Make sure that mains voltage **and** frequency meet the specifications of the motor (voltage tolerance ± 5 % and frequency tolerance ± 2 %.)

The electrical connection of type P1.1 is made with the help of flat connectors size 6,3 mm.

Sample gas pumps of type P1.1 (12 V DC/24 V DC) and P1.1E (all voltages) are delivered as standard with a 3 m connecting cable.

If your sample gas pump has a factory-installed on/off switch on the housing (only P1.1E), verify it is set to the zero position before connecting to power.

WARNING **Hazardous electrical voltage**

The On/Off switch does not ensure switching off all poles.

It is essential to connect the protective earth conductor to the marked protection earth terminal. At model P1.1E (115 V/230 V) the protective earth has to be connected to the green/yellow wire of the connection cable (see Fig. Electrical connection P1.1 pumps).

Select mains and protection earth cross section according to the rated current.

For the electrical connections especially for the protective conductor use a cable cross-section from minimum 0,75 mm^2.

Obey differing specifications on the type plate. The conditions at the installation site must meet all specifications on the type plate.

All parts under voltage must be protected through appropriate measures against contact by persons or foreign body procedures.

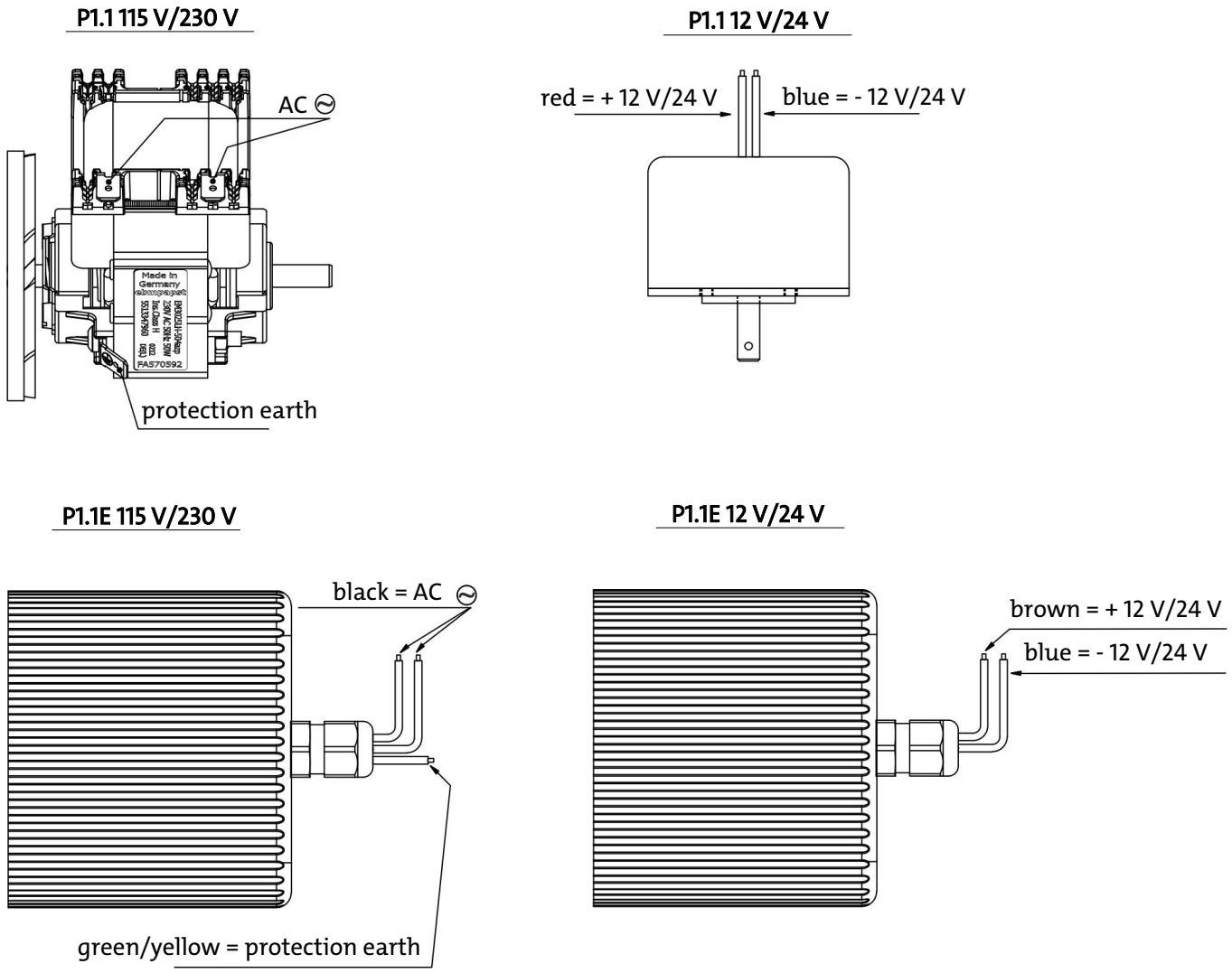

Fig. 1: Electrical connection P1.1 pumps

5 Operation and control

NOTICE

The device must not be operated beyond its specifications.

CAUTION

Hot surface

Burning hazard
According to the product type and operation conditions, the temperature may exceed 50 °C during operation.
Depending on the conditions at the installation site it may be necessary to provide these areas with appropriate warning signs.

DANGER

Toxic, corrosive gases

The measuring gas led through the equipment can be hazardous when breathing or touching it.

a) Check tightness of the measuring system before putting it into operation.

b) Take care that harmful gases are exhausted to a save place.

c) Before maintenance turn off the gas supply and make sure that it cannot be turned on unintentionally.

d) Protect yourself during maintenance against toxic / corrosive gases. Use suitable protective equipment.

5.1 Switching on the sample gas pump

Before switching on the unit, check:

- the hose- and electrical connections are not damaged and correct installed.
- no parts of the sample gas pump have been removed (e.g. cover).
- the gas inlet and outlet of the sample gas pump are not closed.
- the pre-pressure is below 0.3 bar.
- a bypass is installed for continuous operation for throttling below 150 L/h
- ambient parameters are met.
- data on the rating plate is met.
- the voltage and frequency of the motor match the mains values.
- electrical connections are securely connected and monitoring devices are connected and set as prescribed.
- air inlets and cooling surfaces are clean.
- ventilation slots in the housing cover are not covered or dirty, but are freely accessible.
- precautions have been taken; earthing!

When switching the sample gas pump on make sure that

- no abnormal sounds or vibrations occur.
- the flow rate is neither too low nor too high. This would indicate a cracked bellow.

5.2 Operating the sample gas pump

CAUTION

Risk of injury by moving parts

The device may be damaged if it falls down of by impacts. Pay attention to any accessible moving parts.
Operation without cover or with damaged cover is not allowed!

The sample gas pump is suitable for delivering gases only. It is not suitable for liquids.

The sample gas pump should be operated without pressure. A system pressure above 0.3 is not allowed. The gas outlet must not be closed. The flow rate must be at least 50 l/h (150 l/h with system pressure 0.3 bar). If the flow rate continuously is throttled below 150 l/h during operation, the flow rate must be controlled with a bypass valve.

NOTICE

Extreme throttling reduces the life time of the bellow.

If the pump is equipped with a bypass valve, the flow rate can be adjusted. Do not apply force when turning the valve, because the valve may be damaged otherwise! The turning range of the valve is about 5 turns.

6 Maintenance

Maintenance work on the device must be carried out in a cooled state.

The following section describes repair, maintenance and conversion work that can also be carried out easily by you on site, without the sample gas pump having to be sent to us.

During maintenance, remember:

- The equipment must be maintained by a professional familiar with the safety requirements and risks.
- Only perform maintenance work described in these operating and installation instructions.
- When performing maintenance of any type, observe the respective safety and operation regulations.

NOTICE

Please refer to the assembly drawings in the appendix when carrying out maintenance.

DANGER

Electrical voltage

Electrocution hazard.

a) Disconnect the device from power supply.

b) Make sure that the equipment cannot be reconnected to mains unintentionally.

c) The device must be opened by trained staff only.

d) Regard correct mains voltage.

DANGER

Toxic, corrosive gases

The measuring gas led through the equipment can be hazardous when breathing or touching it.

a) Check tightness of the measuring system before putting it into operation.

b) Take care that harmful gases are exhausted to a save place.

c) Before maintenance turn off the gas supply and make sure that it cannot be turned on unintentionally.

d) Protect yourself during maintenance against toxic / corrosive gases. Use suitable protective equipment.

CAUTION

Tipping hazard

Equipment damage.
Secure the device against tipping, sliding and falling.

CAUTION

Gas leakage

The sample gas pump should not be dismantled under pressure.

CAUTION

Hot surface

Burning hazard
According to the product type and operation conditions, the temperature may exceed 50 °C during operation.
Depending on the conditions at the installation site it may be necessary to provide these areas with appropriate warning signs.

Depending on the composition of the sample gas, it may be necessary to replace the in- and out-let valves from time to time.

If the valves are heavily contaminated, especially after a short time, consider installing a particle filter upstream the pump. This increases the service life significantly.

The screws of the fastening ring should be re-tightened after 500 hours of operation with torque 3 Nm.

6.1 Replacing the inlet and outlet valves

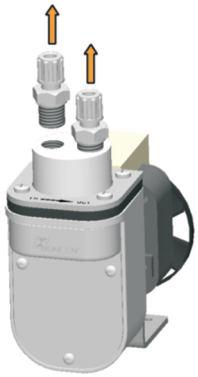

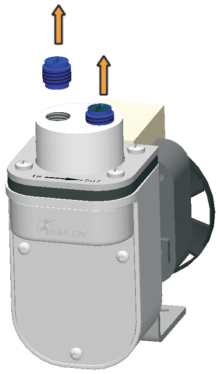

First detach the screw connections.

Unscrew the inlet or outlet valve with a wide slot screwdriver.

Attention: The PVDF and PVDF with bypass valve pump bodies already have PTFE gaskets installed in the gas inlets and outlets. These are also included in the valve spare parts kit. Remove the old gaskets before installing the new ones.

The inlet and outlet valves are identical. Their installation position determines the function. As shown in the image, the valves are blue on one side and black on the other. The valves are further marked “IN” or for inlet and “OUT” for outlet.

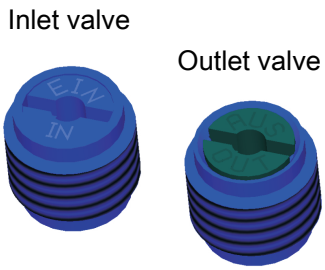

To assemble the sample gas pump, perform the steps in reverse order. When tightening the inlet and outlet valves be sure to observe the required tightening torque of max. 1 Nm. **CAUTION! Tightening the valves more will permanently deform the pump body, requiring replacement.**

When installing the screw connection, ensure the connection is tight.

6.2 Replacing the O-ring on the bypass valve (optional)

- Loosen the two screws on the valve plate and carefully remove the entire unit.
- Coat the new O-ring with suitable O-ring grease (e.g. Fluoronox S90/2) and install in the spindle.
- Carefully insert the entire unit into the pump body while turning and tighten screws.

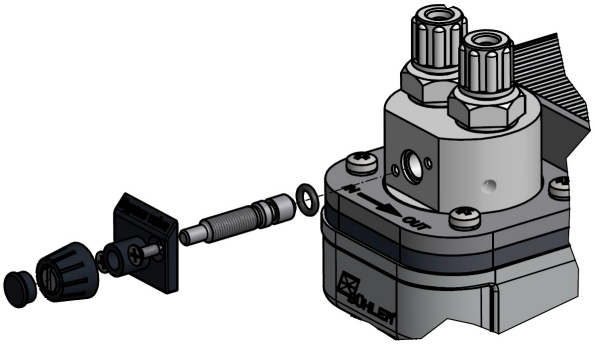

6.3 Replacing parts inside the pump housing

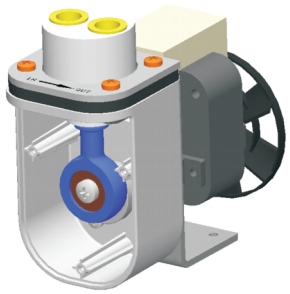

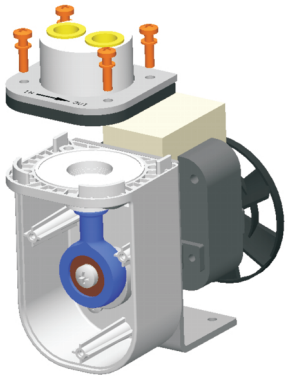

First detach the screw-in connections as described in chapter „Conversion to pump body pointing down“.

Loosen the 4 Torx screws M4x18 (Tx20) and lift the pump head along with mounting ring and foam cover off the console.

6.4 Replacing the bellow

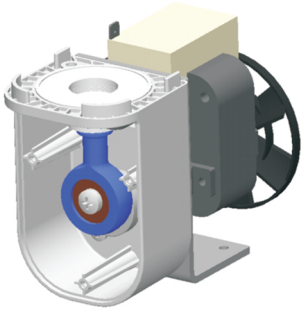

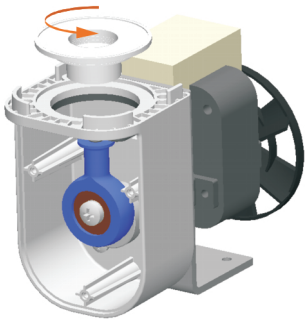

To replace the bellow carefully unscrew it from the connecting rod counter clockwise. Be sure not to lose any installed shims.

Before reinstalling the bellow be sure it is not damaged.

Reinstall hand tight in reverse order.

6.5 Crank gear replacement

NOTICE

Restrictions for connecting rod-eccentric replacement

The individual replacement of the eccentric, connecting rod or bearings is not allowed. Only the factory pre-assembled connecting rod-eccentric combination is suitable for replacement by the operator.

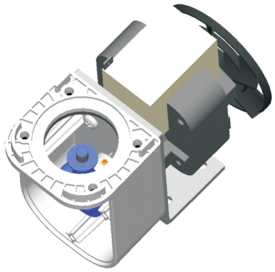

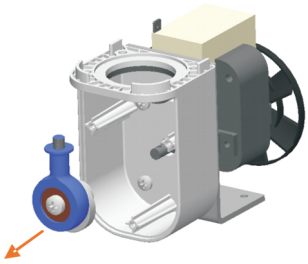

The crank gear consists of the connecting rod with ball bearing and eccentric.

After removing the bellow remove the set-screw inside the eccentric M3 using a size 1,5 setscrew wrench (or Tx6 for torx drive depending on the screw type).

The crank gear may now be removed from the motor shaft.

Before installing the replacement part remove any rust residue on the motor shaft and coat with non-resinous oil.

Reinstall the set screw with a drop of medium-strength threadlocker. When tightening the set screw, be sure it is seated in the locking hole on the shaft. Once it touches the bore, tighten the set screw 90° more.

6.6 Assembly of the sample gas pump

If the sample gas pump was removed, install in reverse order. Be sure the sealing surfaces of the below and pump head are clean and aren't scratched (even minimal grooves can cause leaks). First evenly tighten the 4 Torx screws M4x18 at 1 Nm. Then tighten the screws to 3 Nm.

CAUTION! Tighten each screw only once at 3 Nm. The bellow and pump body material (PTFE) is very weak and has high flow properties.

Check the sample gas pumps for tightness and proper function.

7 Service and repair

This chapter contains information on troubleshooting and correction should an error occur during operation.

Repairs to the unit must be performed by Bühler authorised personnel.

Please contact our Service Department with any questions:

Tel.: +49-(0)2102-498955 or your agent

If the equipment is not functioning properly after correcting any malfunctions and switching on the power, it must be inspected by the manufacturer. Please send the equipment inside suitable packaging to:

Bühler Technologies GmbH

- Reparatur/Service -

Harkortstraße 29

40880 Ratingen

Germany

Please also attach the completed and signed RMA decontamination statement to the packaging. We will otherwise be unable to process your repair order.

You will find the form in the appendix of these instructions, or simply request it by e-mail:

service@buehler-technologies.com.

7.1 Troubleshooting

CAUTION **Risk due to defective device**

Personal injury or damage to property

a) Switch off the device and disconnect it from the mains.

b) Repair the fault immediately. The device should not be turned on again before elimination of the failure.

CAUTION **Hot surface**

Burning hazard
According to the product type and operation conditions, the temperature may exceed 50 °C during operation.
Depending on the conditions at the installation site it may be necessary to provide these areas with appropriate warning signs.

Problem / Failure	Possible cause	Solution
Pump does not start	– Mains disrupted or not correctly mounted	– Check fitting, fuse and switches
Pump does not transport	– Valves damaged or spoiled	– Blow out valves carefully or replace them
	– Bypass valve open	– Close bypass valve
	– Bellow cracked	– Replace bellow
Pump noisy	– Crank gear worn-out	– Replace crank gear
Insufficient delivery rate	– Leakage	– Re-tighten the head screws, regard allowed torque (see chapter Assembly of the sample gas pump [> page 18]).
	– Bellow cracked	– Check bellow and replace it, if necessary
	– Valves damaged or spoiled	– Blow out valves carefully or replace them

Tab. 1: Trouble shooting

7.2 Spare parts and accessories

Please also specify the model and serial number when ordering parts.

Upgrade and expansion parts can be found in our catalog.

Available spare parts:

Spare part	Item no.	Pos. in spare parts drawing 42/018-Z03-01-2
Bellow	42 28 00 3	18
Set inlet/outlet valves 70 °C	42 28 06 6	2 x 23/26
O-ring bypass valve	90 09 39 8	28
Crankshaft assembly spare parts kit	42 28 06 5	6, 7, 8, 9, 10
Mounting bracket	42 28 06 0	43a
Mounting bracket for housing version	42 28 06 7	43b
Set of bumpers incl. nuts & lock washers	42 28 06 1	39, 40, 41, 42
Mounting bracket & set of bumpers	42 28 06 2	39, 40, 41, 42, 43a
Mounting bracket & set of bumpers for housing version	42 28 06 3	39, 40, 41, 42, 43b

Tab. 2: Spare parts and accessories

8 Disposal

The applicable national laws must be observed when disposing of the products. Disposal must not result in a danger to health and environment.

The crossed out wheelie bin symbol on Bühler Technologies GmbH electrical and electronic products indicates special disposal notices within the European Union (EU).

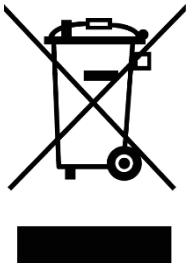

The crossed out wheelie bin symbol indicates the electric and electronic products bearing the symbol must be disposed of separate from household waste. They must be properly disposed of as waste electrical and electronic equipment.

Bühler Technologies GmbH will gladly dispose of your device bearing this mark. Please send your device to the address below for this purpose.

We are obligated by law to protect our employees from hazards posed by contaminated devices. Therefore please understand that we can only dispose of your waste equipment if the device is free from any aggressive, corrosive or other operating fluids dangerous to health or environment. **Please complete the "RMA Form and Decontamination Statement", available on our website, for every waste electrical and electronic equipment. The form must be applied to the packaging so it is visible from the outside.**

Please return waste electrical and electronic equipment to the following address:

Bühler Technologies GmbH
WEEE
Harkortstr. 29
40880 Ratingen
Germany

Please also observe data protection regulations and remember you are personally responsible for the returned waste equipment not bearing any personal data. Therefore please be sure to delete your personal data before returning your waste equipment.

9 Appendices

9.1 Technical data

Technical Data P1.1/P1.1E	
Supply voltage/power input:	230 V 50 Hz 0.48 A 115 V 60 Hz 0.84 A 12 V DC, 1.55 A 24 V DC 0.8 A
Type of protection OEM/housing & 12 V/24 V:	IP 00/IP 20
Mechanical load	Tested based on DNV-GL CG0339 vibration class A (0.7g) 2 Hz-13.2 Hz Amplitude ± 1.0 mm 13.2 Hz -100 Hz 0.7g acceleration
Weight (without accessories):	approx. 1.3 kg (12 V/24 V approx. 0.8 kg)
Medium temperature:	70 °C
Ambient temperature:	0 °C to 50 °C
Nominal output:	280 L/h
Materials in contact with media: varies by configuration:	PTFE, PVDF, 1.4571, 1.4401, Viton

The gas lines are connected via screw-in connections (G1/4 thread). The respective screw-in connections as well as mounting bracket and vibration absorber are sold separately.

9.2 Feed curve

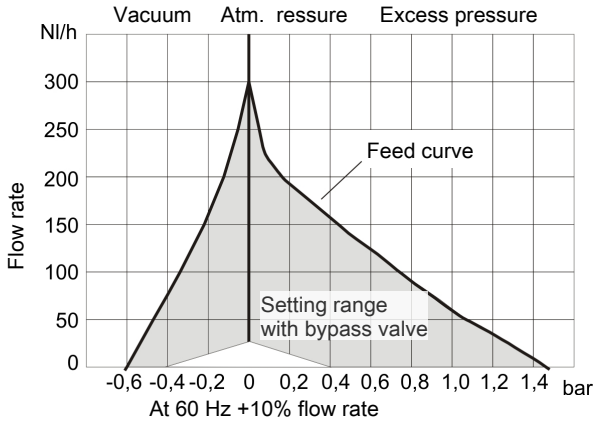

9.3 Dimensions P1.1 (115 V / 230 V)

The P1.1 sample gas pump is connected to electricity via blade receptacles.

without accessories:

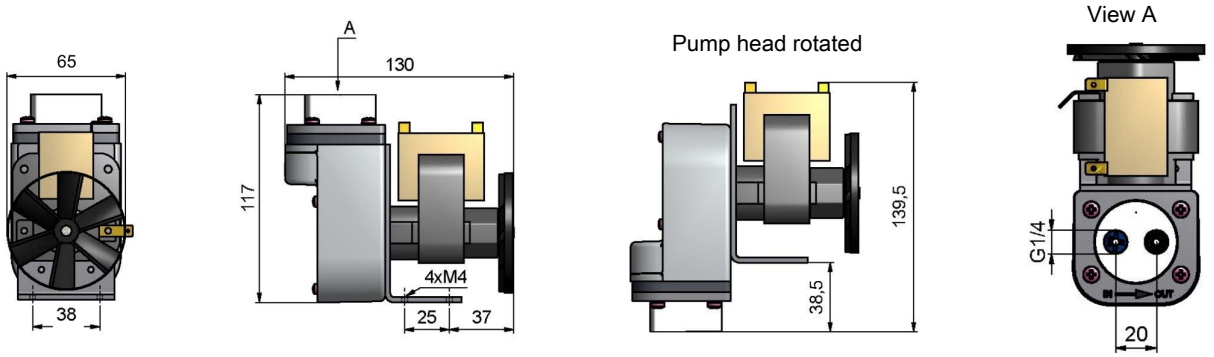

with accessories:

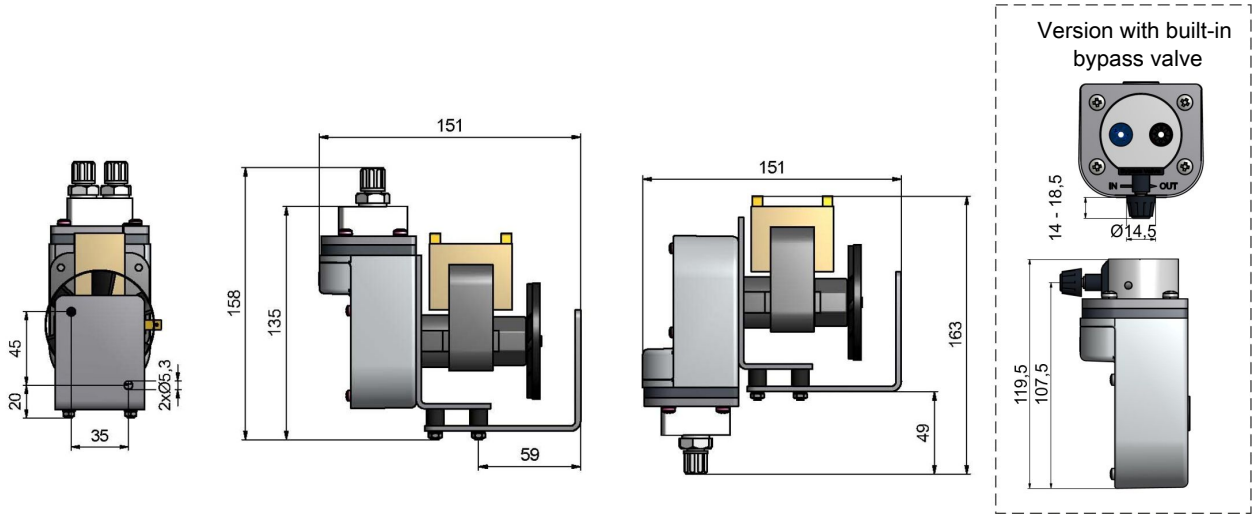

9.4 Dimensions P1.1 (12 V DC or 24 V DC)

The P1.1 (24 V DC) sample gas pump may be connected by standard 3 m connecting cable.

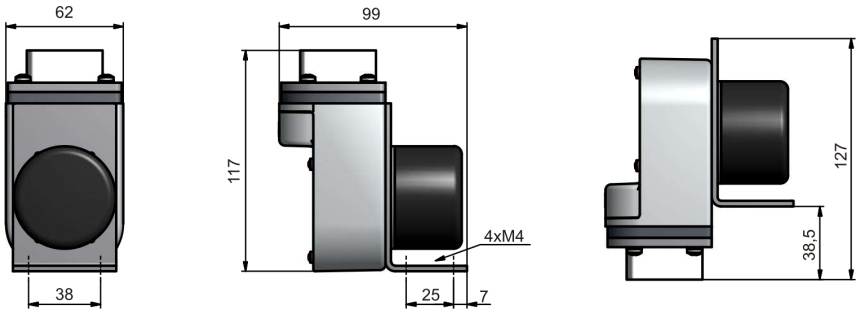

9.5 Dimensions P1.1E Pumpe (all voltages)

The P1.1E sample gas pump may be connected by standard 3 m connecting cable.

without accessories:

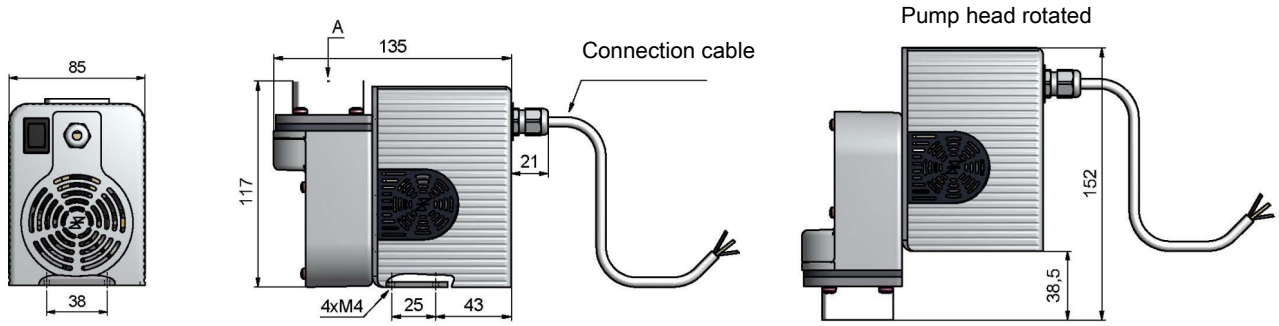

with accessories:

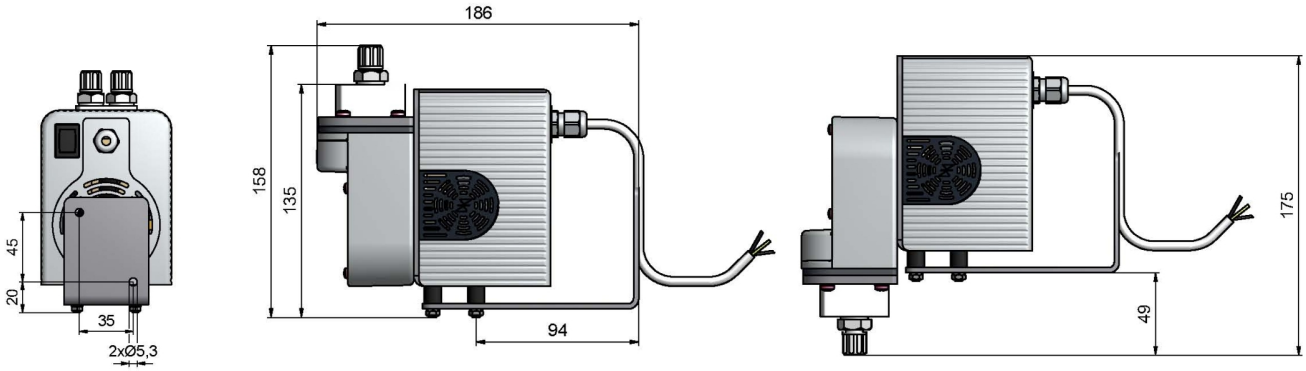

10 Attached documents

- Spare parts and assembly drawing: 42/018-Z03-01-2
- Declaration of conformity: KX420009
- Certificates: FM16NCA0008, FM16NUS0017
- RMA – Decontamination statement

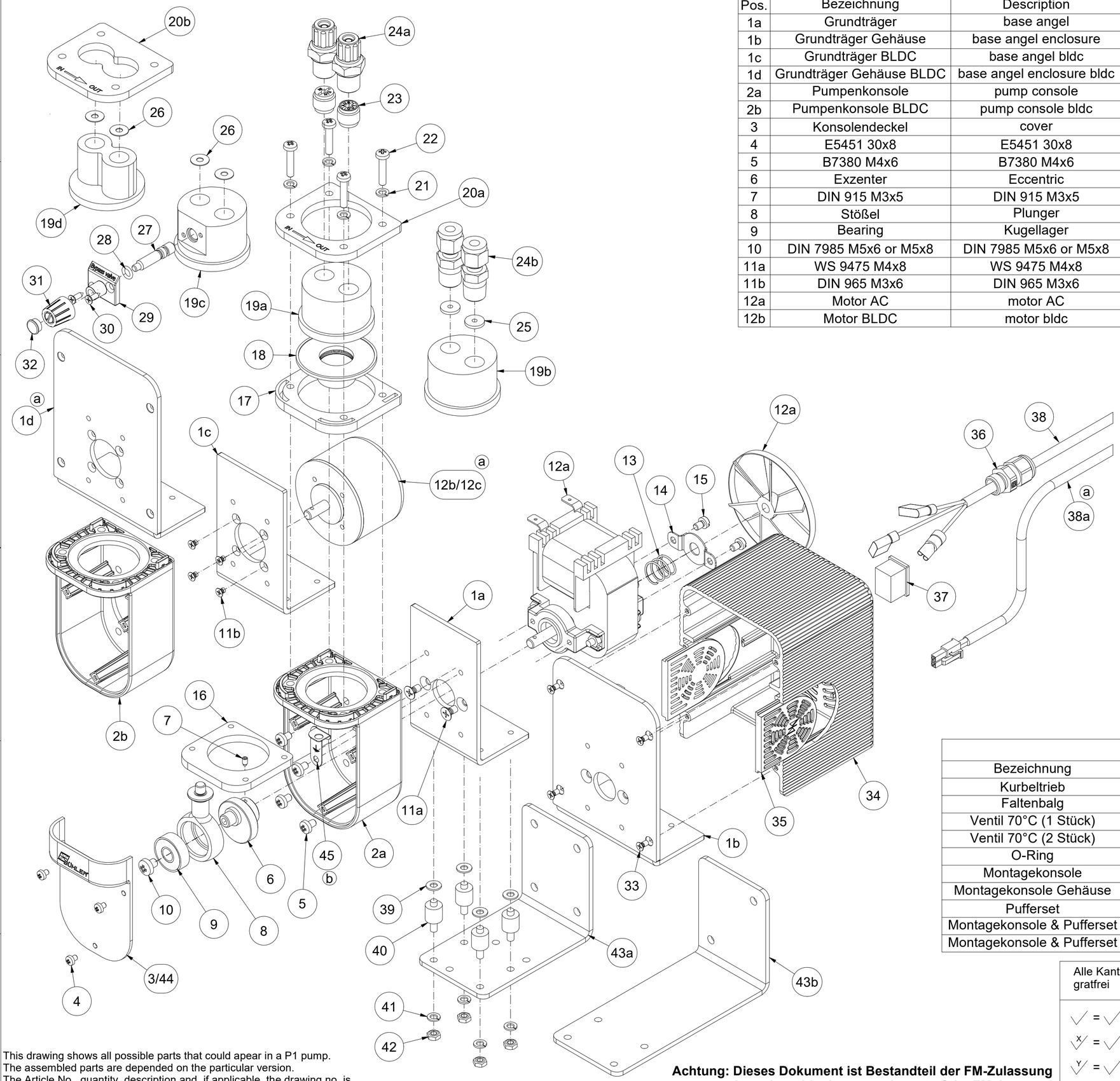

Pos.	Bezeichnung	Description	Pos.	Bezeichnung	Description
1a	Grundträger	base angel	12c	Motor BLDC mit Stecker	motor bldc with plug
1b	Grundträger Gehäuse	base angel enclosure	13	Feder	spring
1c	Grundträger BLDC	base angel bldc	14	Erdungsblech	protective ground sheet
1d	Grundträger Gehäuse BLDC	base angel enclosure bldc	15	DIN 85 M4x6	DIN 85 M4x6
2a	Pumpenkonsole	pump console	16	Gegenring	counter ring
2b	Pumpenkonsole BLDC	pump console bldc	17	Abdeckung	cover
3	Konsolendeckel	cover	18	Faltenbalg	bellow
4	E5451 30x8	E5451 30x8	19a	Pumpenkörper PTFE	pump head PTFE
5	B7380 M4x6	B7380 M4x6	19b	Pumpenkörper VA	pump head SS
6	Exzenter	Eccentric	19c	Pumpenkörper PVDF Bypass	pump head PVDF bypass
7	DIN 915 M3x5	DIN 915 M3x5	19d	Pumpenkörper PVDF	pump head PVDF
8	Stößel	Plunger	20a	Befestigungsring	mounting ring
9	Bearing	Kugellager	20b	Befestigungsring nur PVDF Körper	mounting ring only PVDF head
10	DIN 7985 M5x6 or M5x8	DIN 7985 M5x6 or M5x8	21	DIN 127 B4,1 oder DIN 6796	DIN 127 B4,1 or DIN 6796
11a	WS 9475 M4x8	WS 9475 M4x8	22	B7380 M4x20	B7380 M4x20
11b	DIN 965 M3x6	DIN 965 M3x6	23	Ein- Auslassventil	In- Outletvalve
12a	Motor AC	motor AC	24a	Verschraubung PVDF	Fitting PVDF
12b	Motor BLDC	motor bldc	24b	Verschraubung VA	Fitting SS
			25	Verdränger	displacer
			26	Dichtscheibe	valve sealing
			27	Spindel	spindle
			28	O-Ring	o-ring
			29	Ventilplatte	valve plate
			30	DIN 7982 2,9x9,5	DIN 7982 2,9x9,5
			31	Drehknopf	knob
			32	Abdeckung	cover
			33	E5454 30x8	E5454 30x8
			34	Gehäuseteil 1	enclosure part 1
			35	Gehäuseteil 2	enclosure part 2
			36	Kabelverschraubung	cable gland
			37	Blindstopfen	dummy plug
			38	Anschlusskabel	connection cable
			38a	Anschlusskabel BLDC	connection cable bldc
			39	DIN 125 A4,3	DIN 125 A4,3
			40	Gummi Puffer	vibration damper
			41	DIN 127 B4,1 oder DIN 6796	DIN 127 B4,1 or DIN 6796
			42	DIN 934 M4	DIN 934 M4
			43a	Montagekonsole	Mounting console
			43b	Montagekonsole Gehäuse	Mounting console enclosure
			44	Konsolendeckel mit Lüftungsschlitzen	Cover with ventilation slots
			45	Potentialausgleichsblech	Equipotential bonding sheet

Ersatzteile / Spare parts			
Bezeichnung	Description	Artikel Nr. / Article no.	Pos.Nr. / Pos. no.
Kurbeltrieb	crank assembly	4228065	6/7/8/9/10
Faltenbalg	bellow	4228003	18
Ventil 70°C (1 Stück)	Valve 70°C (1 piece)	4228006	23
Ventil 70°C (2 Stück)	Valve 70°C (2 Stück)	4228066	23/26
O-Ring	O-ring	9009398	28
Montagekonsole	Mounting console	4228060	43a
Montagekonsole Gehäuse	Mounting console enclosure	4228067	43b
Pufferset	Damper set	4228061	39/40/41/42
Montagekonsole & Pufferset	Mounting console & damper set	4228062	39/40/41/42/43a
Montagekonsole & Pufferset	Mounting console & damper set	4228063	39/40/41/42/43b

This drawing shows all possible parts that could apear in a P1 pump.
The assembled parts are depended on the particular version.
The Article No., quantity, description and, if applicable, the drawing no. is shown in the parts list schematic - document "4573-A02".

Achtung: Dieses Dokument ist Bestandteil der FM-Zulassung
Attention: this document is part of the FM-Approval

Alle Kanten gratfrei

Alle Rechte vorbehalten

Maße ohne Toleranzangabe nach ISO 2768-mK

					Datum:	Name:
				Bearb.	13.10.2015	Sundergeld
				Gepr.		
b	add pos.45	16.05.22	Sun			
a	Table+3	24.10.19	Sun			
Zust.	Änd.	Datum	Name			

√ = √ Roh
X √ = √ Rz 63
Y √ = √ Rz 16
Z √ = √ Rz 4

BÜHLER Technologies GmbH 40880 Ratingen

Ers.für:

Maßstab: 1:1,6

Masse:

Werkstoff:

Benennung:
Exploded view of the P1.x Pumps

ZeichnungsNr.: 42/018-Z03-01-2B

Art.Nr.: 42...

Arbeitsanweisung:

EG-/EU Konformitätserklärung
EC/EU Declaration of Conformity

Hiermit erklärt Bühler Technologies GmbH, dass die nachfolgenden Produkte den wesentlichen Anforderungen der Richtlinie

2006/42/EG
(MRL)

in ihrer aktuellen Fassung entsprechen.

Die Produkte sind Maschinen nach Artikel 2 a).

Herewith declares Bühler Technologies GmbH that the following products correspond to the essential requirements of Directive

2006/42/EC
(MD)

in its actual version.

The products are machines according to article 2 (a).

Produkt / *products*: Messgaspumpe / *Sample gas pump*
Typ / *type*: P 1.x

Das Betriebsmittel ist für den Einbau in Gasanalysesystemen bestimmt und für das Fördern von ausschließlich gasförmigen Medien vorgesehen.
The equipment is designed for installation in gas analyser systems and is designed to transport only gaseous media.

Das oben beschriebene Produkt der Erklärung erfüllt die einschlägigen Harmonisierungsrechtsvorschriften der Union:
The object of the declaration described above is in conformity with the relevant Union harmonisation legislation:

EN 809:1998+A1:2009 + AC:2010 **EN 60204-1:2018**

Zusätzlich wurden berücksichtigt:
In addition, the following standards have been used:
EN ISO 12100:2010

Die alleinige Verantwortung für die Ausstellung dieser Konformitätserklärung trägt der Hersteller.
This declaration of conformity is issued under the sole responsibility of the manufacturer.

Dokumentationsverantwortlicher für diese Konformitätserklärung ist Herr Stefan Eschweiler mit Anschrift am Firmensitz.
The person authorised to compile the technical file is Mr.Stefan Eschweiler located at the company's address.

Ratingen, den 15.09.2022

Stefan Eschweiler
Geschäftsführer – *Managing Director*

Frank Pospiech
Geschäftsführer – *Managing Director*

Bühler Technologies GmbH, Harkortstr. 29, D-40880 Ratingen,
Tel. +49 (0) 21 02 / 49 89-0, Fax. +49 (0) 21 02 / 49 89-20
Internet: www.buehler-technologies.com

UK Declaration of Conformity

The manufacturer Bühler Technologies GmbH declares, under the sole responsibility, that the product complies with the requirements of the following UK legislation:

Machinery Safety Regulations 2008

Product: Sample gas pump
Type: P 1.x

The equipment is designed for installation in gas analyser systems and is designed to transport only gaseous media.

The object of the declaration described above is in conformity with the relevant designated standards:

EN 809:1998+A1:2009 + AC:2010

EN 60204-1:2018

In addition, the following standards have been used:

EN ISO 12100:2010

Ratingen in Germany, 01.11.2022

Stefan Eschweiler
Managing Director

Frank Pospiech
Managing Director

KX 42 0009UK

Bühler Technologies GmbH, Harkortstr. 29, D-40880 Ratingen,
Tel. +49 (0) 21 02 / 49 89-0, Fax. +49 (0) 21 02 / 49 89-20
Internet: www.buehler-technologies.com

FM Approvals
1151 Boston Providence Turnpike
P.O. Box 9102 Norwood, MA 02062 USA
T: **781 762 4300** F: 781-762-9375 www.fmapprovals.com

CERTIFICATE OF COMPLIANCE

ELECTRICAL EQUIPMENT
PER CANADIAN REQUIREMENTS

This certificate is issued for the following equipment:

4228abc1def00FM. P1.1 Sample Gas Pump.
a = Motor voltage: 1, 2, 3 or 4.
b = Pump head position: 1 or 2.
c = Pump head material: 1, 2, 3 or 4.
d = Screw-in connections / pipe fitting: 0, 1, 2, 3, 5 or 6.
e = Mounting accessories: 0, 1 or 2.
f = Housing: 0, 1 or 2.

Equipment Ratings:

Electrical Equipment for use indoor unclassified or Ordinary locations.

FM Approved for:

Bühler Technologies GmbH
Ratingen, Germany

To verify the availability of the Approved product, please refer to www.approvalguide.com

This certifies that the equipment described has been found to comply with the following Approval Standards and other documents:

CAN C22.2 No. 213	2012
CAN C22.2 No. 1010.1	2004

Original Project ID: 3057155CGP

Approval Granted: April 11, 2016

Subsequent Revision Reports / Date Approval Amended

Report Number	Date	Report Number	Date

FM Approvals LLC

J.E. Marquedant
Manager, Electrical Systems

11 April 2016
Date

To verify the availability of the Approved product, please refer to www.approvalguide.com

CERTIFICATE OF CONFORMITY

1. **ELECTRICAL EQUIPMENT PER CANADIAN REQUIREMENTS**

2. **Certificate No:** **FM16NCA0008**

3. **Equipment:** **P1.1 Sample Gas Pumps**
   (Type Reference and Name)

4. **Name of Listing Company:** **Bühler Technologies GmbH**

5. **Address of Listing Company:** **Harkortstraße 29**
   40880, Ratingen, Germany

6. The examination and test results are recorded in confidential report number:

   3057155 dated 11th April 2016

7. FM Approvals LLC, certifies that the equipment described has been found to comply with the following Approval standards and other documents:

   CSA-C22.2 No. 213:2012, CAN/CSA-C22.2 No. 61010-1:2004

8. This certificate relates to the design, examination and testing of the products specified herein. The FM Approvals surveillance audit program has further determined that the manufacturing processes and quality control procedures in place are satisfactory to manufacture the product as examined, tested and Approved.

9. Equipment Ratings:

   Electrical equipment for use indoor unclassified or Ordinary locations

Certificate issued by:

J. E. Marquedant
Manager, Electrical Systems

9 December 2016
Date

To verify the availability of the Approved product, please refer to www.approvalguide.com

THIS CERTIFICATE MAY ONLY BE REPRODUCED IN ITS ENTIRETY AND WITHOUT CHANGE

FM Approvals LLC. 1151 Boston-Providence Turnpike, Norwood, MA 02062 USA
T: +1 (1) 781 762 4300 F: +1 (1) 781 762 9375 E-mail: information@fmapprovals.com www.fmapprovals.com

SCHEDULE

to Canadian Certificate Of Conformity No: FM16NCA0008

10. **Description of Equipment:**

The P1 sample gas pumps carry gases from various processes to analyzers. The gas circuit typically has additional analysis components such as sample gas probe, filter, flow meter, cooler, etc. The sample gas pump P1 consists of the main components, the pump head and motor. An eccentric converts the rotation of the motor into an up and down motion using a connecting rod, thus producing the pump mechanism. Inside the so-called pump body, above the bellows, which facilitates the pump motion, are inlet and outlet valves. The user connects the gas circuits to the sample gas pump through screw-in connections.

The P1 sample gas pumps are available as 12Vdc, 24Vdc, 115Vac, 60Hz or 230Vac, 50Hz. The 115Vac and 230Vac sample gas pumps are available with or without a cover over the electronics and motor. The 115Vac and 230Vac sample gas pumps have internal self resetting thermal protection built into the motor. The P1.1 sample gas pump is for general pupose non-hazardous locations.

Model Code Structure:

4228abc1def00FM. P1.1 Sample Gas Pump.
a = Motor voltage: 1, 2, 3 or 4.
b = Pump head position: 1 or 2.
c = Pump head material: 1, 2, 3 or 4.
d = Screw-in connections / pipe fitting: 0, 1, 2, 3, 5 or 6.
e = Mounting accessories: 0, 1 or 2.
f = Housing: 0 or 1

11. **Test and Assessment Procedure and Conditions:**

This Certificate has been issued in accordance with FM Approvals Canadian Certification Requirements.

12. **Schedule Drawings**

A copy of the technical documentation has been kept by FM Approvals.

13. **Certificate History**

Details of the supplements to this certificate are described below:

Date	Description
11th April 2016	Original Issue.
9th December 2016	Supplement 1: Report Reference: – RR207245 dated 9th December 2016 Description of the Change: Changes per this revision request are for the NI version of the product and don't affect this certificate. This certificate has been put into the new format.

THIS CERTIFICATE MAY ONLY BE REPRODUCED IN ITS ENTIRETY AND WITHOUT CHANGE

CERTIFICATE OF CONFORMITY

1. **ELECTRICAL EQUIPMENT PER CANADIAN REQUIREMENTS**

2. **Certificate No:** **FM16NCA0008**

3. **Equipment:** **P1.1 Sample Gas Pumps**
   (Type Reference and Name)

4. **Name of Listing Company:** **Bühler Technologies GmbH**

5. **Address of Listing Company:** **Harkortstraße 29**
   40880, Ratingen, Germany

6. The examination and test results are recorded in confidential report number:

   3057155 dated 11th April 2016

7. FM Approvals LLC, certifies that the equipment described has been found to comply with the following Approval standards and other documents:

   CSA-C22.2 No. 213:2012, CAN/CSA-C22.2 No. 61010-1:2004

8. This certificate relates to the design, examination and testing of the products specified herein. The FM Approvals surveillance audit program has further determined that the manufacturing processes and quality control procedures in place are satisfactory to manufacture the product as examined, tested and Approved.

9. Equipment Ratings:

   Electrical equipment for use indoor unclassified or Ordinary locations

Certificate issued by:

J. E. Marquedant
VP, Manager - Electrical Systems

2 April 2020
Date

To verify the availability of the Approved product, please refer to www.approvalguide.com

THIS CERTIFICATE MAY ONLY BE REPRODUCED IN ITS ENTIRETY AND WITHOUT CHANGE

FM Approvals LLC. 1151 Boston-Providence Turnpike, Norwood, MA 02062 USA
T: +1 (1) 781 762 4300 F: +1 (1) 781 762 9375 E-mail: information@fmapprovals.com www.fmapprovals.com

SCHEDULE

to Canadian Certificate Of Conformity No: FM16NCA0008

10. **Description of Equipment:**

The P1 sample gas pumps carry gases from various processes to analyzers. The gas circuit typically has additional analysis components such as sample gas probe, filter, flow meter, cooler, etc. The sample gas pump P1 consists of the main components, the pump head and motor. An eccentric converts the rotation of the motor into an up and down motion using a connecting rod, thus producing the pump mechanism. Inside the so-called pump body, above the bellows, which facilitates the pump motion, are inlet and outlet valves. The user connects the gas circuits to the sample gas pump through screw-in connections.

The P1 sample gas pumps are available as 12Vdc, 24Vdc, 115Vac, 60Hz or 230Vac, 50Hz. The 115Vac and 230Vac sample gas pumps have internal self resetting thermal protection built into the motor. The P1.1 sample gas pump is for general pupose non-hazardous locations.

Model Code Structure:

4228abc1def00FM. P1.1 Sample Gas Pump.
a = Motor voltage: 1, 2, 3 or 4.
b = Pump head position: 1 or 2.
c = Pump head material: 1, 2, 3 or 4.
d = Screw-in connections / pipe fitting: 0, 1, 2, 3, 5 or 6.
e = Mounting accessories: 0, 1 or 2.
f = Housing: 0 or 1

11. **Test and Assessment Procedure and Conditions:**

This Certificate has been issued in accordance with FM Approvals Canadian Certification Requirements.

12. **Schedule Drawings**

A copy of the technical documentation has been kept by FM Approvals.

13. **Certificate History**

Details of the supplements to this certificate are described below:

Date	Description
11th April 2016	Original Issue.
9th December 2016	Supplement 1: Report Reference: – RR207245 dated 9th December 2016. Description of the Change: Changes per this revision request are for the NI version of the product and don't affect this certificate. This certificate has been put into the new format.
2nd April 2020	Supplement 2: Report Reference: – PR455937 dated 2nd April 2020.

THIS CERTIFICATE MAY ONLY BE REPRODUCED IN ITS ENTIRETY AND WITHOUT CHANGE

SCHEDULE

to Canadian Certificate Of Conformity No: FM16NCA0008

Date	Description
	Description of the Change: Add option for gas pump cover DC motors.

FM Approvals LLC. 1151 Boston-Providence Turnpike, Norwood, MA 02062 USA
T: +1 (1) 781 762 4300 F: +1 (1) 781 762 9375 E-mail: information@fmapprovals.com www.fmapprovals.com

FM Approvals
1151 Boston Providence Turnpike
P.O. Box 9102 Norwood, MA 02062 USA
T: **781 762 4300** F: 781-762-9375 www.fmapprovals.com

CERTIFICATE OF COMPLIANCE

ELECTRICAL EQUIPMENT

This certificate is issued for the following equipment:

4228abc1def00FM. P1.1 Sample Gas Pump.
a = Motor Voltage: 1, 2, 3 or 4.
b = Pump head position: 1 or 2.
c = Pump head material: 1, 2, 3 or 4.
d = Screw-in connections / pipe fitting: 0, 1, 2, 3, 5 or 6.
e = Mounting accessories: 0, 1 or 2.
f = Housing: 0, 1 or 2.

Equipment Ratings:

Electrical Equipment for use indoor unclassified or Ordinary locations.

FM Approved for:

Bühler Technologies GmbH
Ratingen, Germany

To verify the availability of the Approved product, please refer to www.approvalguide.com

This certifies that the equipment described has been found to comply with the following Approval Standards and other documents:

FM3810	2005

Original Project ID: 3057155GP Approval Granted: April 11, 2016

Subsequent Revision Reports / Date Approval Amended

Report Number	Date	Report Number	Date

FM Approvals LLC

J.E. Marquedant
Manager, Electrical Systems

11 April 2016
Date

To verify the availability of the Approved product, please refer to www.approvalguide.com

CERTIFICATE OF CONFORMITY

1. **ELECTRICAL EQUIPMENT PER US REQUIREMENTS**

2. **Certificate No:** **FM16NUS0017**

3. **Equipment:** **P1.1 Sample Gas Pumps**
   (Type Reference and Name)

4. **Name of Listing Company:** **Bühler Technologies GmbH**

5. **Address of Listing Company:** **Harkortstraße 29**
   40880, Ratingen, Germany

6. The examination and test results are recorded in confidential report number:

   3057155 dated 11th April 2016

7. FM Approvals LLC, certifies that the equipment described has been found to comply with the following Approval standards and other documents:

   FM Class 3810:2005

8. This certificate relates to the design, examination and testing of the products specified herein. The FM Approvals surveillance audit program has further determined that the manufacturing processes and quality control procedures in place are satisfactory to manufacture the product as examined, tested and Approved.

9. Equipment Ratings:

   Electrical equipment for use indoor unclassified or Ordinary locations.

Certificate issued by:

J.E. Marquedant
Manager, Electrical Systems

9 December 2016
Date

To verify the availability of the Approved product, please refer to www.approvalguide.com

THIS CERTIFICATE MAY ONLY BE REPRODUCED IN ITS ENTIRETY AND WITHOUT CHANGE

FM Approvals LLC. 1151 Boston-Providence Turnpike, Norwood, MA 02062 USA
T: +1 (1) 781 762 4300 F: +1 (1) 781 762 9375 E-mail: information@fmapprovals.com www.fmapprovals.com

SCHEDULE

to US Certificate Of Conformity No: FM16NUS0017

10. **Description of Equipment:**

The P1 sample gas pumps carry gases from various processes to analyzers. The gas circuit typically has additional analysis components such as sample gas probe, filter, flow meter, cooler, etc. The sample gas pump P1 consists of the main components, the pump head and motor. An eccentric converts the rotation of the motor into an up and down motion using a connecting rod, thus producing the pump mechanism. Inside the so-called pump body, above the bellows, which facilitates the pump motion, are inlet and outlet valves. The user connects the gas circuits to the sample gas pump through screw-in connections.

The P1 sample gas pumps are available as 12Vdc, 24Vdc, 115Vac, 60Hz or 230Vac, 50Hz. The 115Vac and 230Vac sample gas pumps are available with or without a cover over the electronics and motor. The 115Vac and 230Vac sample gas pumps have internal self resetting thermal protection built into the motor. The P1.1 sample gas pump is for general pupose non-hazardous locations.

Model Code Structure:

4228abc1def00FM. P1.1 Sample Gas Pump.
a = Motor voltage: 1, 2, 3 or 4.
b = Pump head position: 1 or 2.
c = Pump head material: 1, 2, 3 or 4.
d = Screw-in connections / pipe fitting: 0, 1, 2, 3, 5 or 6.
e = Mounting accessories: 0, 1 or 2.
f = Housing: 0 or 1

11. **Test and Assessment Procedure and Conditions:**

This Certificate has been issued in accordance with FM Approvals US Certification Requirements.

12. **Schedule Drawings**

A copy of the technical documentation has been kept by FM Approvals.

13. **Certificate History**

Details of the supplements to this certificate are described below:

Date	Description
11th April 2016	Original Issue.
9th December 2016	Supplement 1: Report Reference: – RR207245 dated 9th December 2016 Description of the Change: Changes per this revision request are for the NI version of the product and don't affect this certificate. This certificate has been put into the new format.

CERTIFICATE OF CONFORMITY

1. **ELECTRICAL EQUIPMENT PER US REQUIREMENTS**

2. **Certificate No:** **FM16NUS0017**

3. **Equipment:** **P1.1 Sample Gas Pumps**
   (Type Reference and Name)

4. **Name of Listing Company:** **Bühler Technologies GmbH**

5. **Address of Listing Company:** **Harkortstraße 29**
   40880, Ratingen, Germany

6. The examination and test results are recorded in confidential report number:

   3057155 dated 11th April 2016

7. FM Approvals LLC, certifies that the equipment described has been found to comply with the following Approval standards and other documents:

   FM Class 3810:2005

8. This certificate relates to the design, examination and testing of the products specified herein. The FM Approvals surveillance audit program has further determined that the manufacturing processes and quality control procedures in place are satisfactory to manufacture the product as examined, tested and Approved.

9. Equipment Ratings:

   Electrical equipment for use indoor unclassified or Ordinary locations.

Certificate issued by:

J. E. Marquedant
VP, Manager - Electrical Systems

2 April 2020
Date

To verify the availability of the Approved product, please refer to www.approvalguide.com

THIS CERTIFICATE MAY ONLY BE REPRODUCED IN ITS ENTIRETY AND WITHOUT CHANGE

FM Approvals LLC. 1151 Boston-Providence Turnpike, Norwood, MA 02062 USA
T: +1 (1) 781 762 4300 F: +1 (1) 781 762 9375 E-mail: information@fmapprovals.com www.fmapprovals.com

SCHEDULE

to US Certificate Of Conformity No: FM16NUS0017

10. **Description of Equipment:**

The P1 sample gas pumps carry gases from various processes to analyzers. The gas circuit typically has additional analysis components such as sample gas probe, filter, flow meter, cooler, etc. The sample gas pump P1 consists of the main components, the pump head and motor. An eccentric converts the rotation of the motor into an up and down motion using a connecting rod, thus producing the pump mechanism. Inside the so-called pump body, above the bellows, which facilitates the pump motion, are inlet and outlet valves. The user connects the gas circuits to the sample gas pump through screw-in connections.

The P1 sample gas pumps are available as 12Vdc, 24Vdc, 115Vac, 60Hz or 230Vac, 50Hz. The 115Vac and 230Vac sample gas pumps have internal self resetting thermal protection built into the motor. The P1.1 sample gas pump is for general pupose non-hazardous locations.

Model Code Structure:

4228abc1def00FM. P1.1 Sample Gas Pump.
a = Motor voltage: 1, 2, 3 or 4.
b = Pump head position: 1 or 2.
c = Pump head material: 1, 2, 3 or 4.
d = Screw-in connections / pipe fitting: 0, 1, 2, 3, 5 or 6.
e = Mounting accessories: 0, 1 or 2.
f = Housing: 0 or 1

11. **Test and Assessment Procedure and Conditions:**

This Certificate has been issued in accordance with FM Approvals US Certification Requirements.

12. **Schedule Drawings**

A copy of the technical documentation has been kept by FM Approvals.

13. **Certificate History**

Details of the supplements to this certificate are described below:

Date	Description
11th April 2016	Original Issue.
9th December 2016	Supplement 1: Report Reference: – RR207245 dated 9th December 2016. Description of the Change: Changes per this revision request are for the NI version of the product and don't affect this certificate. This certificate has been put into the new format.
2nd April 2020	Supplement 2: Report Reference: – PR455937 dated 2nd April 2020

THIS CERTIFICATE MAY ONLY BE REPRODUCED IN ITS ENTIRETY AND WITHOUT CHANGE

SCHEDULE

to US Certificate Of Conformity No: FM16NUS0017

Date	Description
	Description of the Change: Add option for gas pump cover DC motors.

FM Approvals LLC. 1151 Boston-Providence Turnpike, Norwood, MA 02062 USA
T: +1 (1) 781 762 4300 F: +1 (1) 781 762 9375 E-mail: information@fmapprovals.com www.fmapprovals.com

RMA-Formular und Erklärung über Dekontaminierung
RMA-Form and explanation for decontamination

RMA-Nr./ RMA-No. _____

Die RMA-Nr. bekommen Sie von Ihrem Ansprechpartner im Vertrieb oder Service. Bei Rücksendung eines Altgeräts zur Entsorgung tragen Sie bitte in das Feld der RMA-Nr. "WEEE" ein./ You may obtain the RMA number from your sales or service representative. When returning an old appliance for disposal, please enter "WEEE" in the RMA number box.

Zu diesem Rücksendeschein gehört eine Dekontaminierungserklärung. Die gesetzlichen Vorschriften schreiben vor, dass Sie uns diese Dekontaminierungserklärung ausgefüllt und unterschrieben zurücksenden müssen. Bitte füllen Sie auch diese im Sinne der Gesundheit unserer Mitarbeiter vollständig aus./ This return form includes a decontamination statement. The law requires you to submit this completed and signed decontamination statement to us. Please complete the entire form, also in the interest of our employee health.

Firma/ Company

Firma/ Company	
Straße/ Street	
PLZ, Ort/ Zip, City	
Land/ Country	

Ansprechpartner/ Person in charge

Name/ Name	
Abt./ Dept.	
Tel./ Phone	
E-Mail	

Gerät/ Device	
Anzahl/ Quantity	
Auftragsnr./ Order No.	

Serien-Nr./ Serial No.	
Artikel-Nr./ Item No.	

Grund der Rücksendung/ Reason for return

- ☐ Kalibrierung/ Calibration
- ☐ Modifikation/ Modification
- ☐ Reklamation/ Claim
- ☐ Reparatur/ Repair
- ☐ Elektroaltgerät/ Waste Electrical & Electronic Equipment (WEEE)
- ☐ andere/ other

bitte spezifizieren/ please specify

Ist das Gerät möglicherweise kontaminiert?/ Could the equipment be contaminated?

☐ Nein, da das Gerät nicht mit gesundheitsgefährdenden Stoffen betrieben wurde./ No, because the device was not operated with hazardous substances.

☐ Nein, da das Gerät ordnungsgemäß gereinigt und dekontaminiert wurde./ No, because the device has been properly cleaned and decontaminated.

☐ Ja, kontaminiert mit:/ Yes, contaminated with: _____

☐	☐	☐	☐	☐	☐	☐	☐	☐
explosiv/ explosive	entzündlich/ flammable	brandfördernd/ oxidizing	komprimierte Gase/ compressed gases	ätzend/ caustic	giftig, Lebensgefahr/ poisonous, risk of death	gesundheitsgefährdend/ harmful to health	gesundheitsschädlich/ health hazard	umweltgefährdend/ environmental hazard

Bitte Sicherheitsdatenblatt beilegen!/ Please enclose safety data sheet!

Das Gerät wurde gespült mit:/ The equipment was purged with: _____

Diese Erklärung wurde korrekt und vollständig ausgefüllt und von einer dazu befugten Person unterschrieben. Der Versand der (dekontaminierten) Geräte und Komponenten erfolgt gemäß den gesetzlichen Bestimmungen.

This declaration has been filled out correctly and completely, and signed by an authorized person. The dispatch of the (decontaminated) devices and components takes place according to the legal regulations.

Falls die Ware nicht gereinigt, also kontaminiert bei uns eintrifft, muss die Firma Bühler sich vorbehalten, diese durch einen externen Dienstleister reinigen zu lassen und Ihnen dies in Rechnung zu stellen.

Should the goods not arrive clean, but contaminated, Bühler reserves the right, to comission an external service provider to clean the goods and invoice it to your account.

Firmenstempel/ Company Sign

Datum/ Date _____

rechtsverbindliche Unterschrift/ Legally binding signature

Bühler Technologies GmbH, Harkortstr. 29, D-40880 Ratingen
Tel. +49 (0) 21 02 / 49 89-0, Fax: +49 (0) 21 02 / 49 89-20
E-Mail: service@buehler-technologies.com
Internet: www.buehler-technologies.com

Vermeiden von Veränderung und Beschädigung der einzusendenden Baugruppe

Die Analyse defekter Baugruppen ist ein wesentlicher Bestandteil der Qualitätssicherung der Firma Bühler Technologies GmbH. Um eine aussagekräftige Analyse zu gewährleisten muss die Ware möglichst unverändert untersucht werden. Es dürfen keine Veränderungen oder weitere Beschädigungen auftreten, die Ursachen verdecken oder eine Analyse unmöglich machen.

Umgang mit elektrostatisch sensiblen Baugruppen

Bei elektronischen Baugruppen kann es sich um elektrostatisch sensible Baugruppen handeln. Es ist darauf zu achten, diese Baugruppen ESD-gerecht zu behandeln. Nach Möglichkeit sollten die Baugruppen an einem ESD-gerechten Arbeitsplatz getauscht werden. Ist dies nicht möglich sollten ESD-gerechte Maßnahmen beim Austausch getroffen werden. Der Transport darf nur in ESD-gerechten Behältnissen durchgeführt werden. Die Verpackung der Baugruppen muss ESD-konform sein. Verwenden Sie nach Möglichkeit die Verpackung des Ersatzteils oder wählen Sie selber eine ESD-gerechte Verpackung.

Einbau von Ersatzteilen

Beachten Sie beim Einbau des Ersatzteils die gleichen Vorgaben wie oben beschrieben. Achten Sie auf die ordnungsgemäße Montage des Bauteils und aller Komponenten. Versetzen Sie vor der Inbetriebnahme die Verkabelung wieder in den ursprünglichen Zustand. Fragen Sie im Zweifel beim Hersteller nach weiteren Informationen.

Einsenden von Elektroaltgeräten zur Entsorgung

Wollen Sie ein von Bühler Technologies GmbH stammendes Elektroprodukt zur fachgerechten Entsorgung einsenden, dann tragen Sie bitte in das Feld der RMA-Nr. „WEEE“ ein. Legen Sie dem Altgerät die vollständig ausgefüllte Dekontaminierungserklärung für den Transport von außen sichtbar bei. Weitere Informationen zur Entsorgung von Elektroaltgeräten finden Sie auf der Webseite unseres Unternehmens.

Avoiding alterations and damage to the components to be returned

Analysing defective assemblies is an essential part of quality assurance at Bühler Technologies GmbH. To ensure conclusive analysis the goods must be inspected unaltered, if possible. Modifications or other damages which may hide the cause or render it impossible to analyse are prohibited.

Handling electrostatically conductive components

Electronic assemblies may be sensitive to static electricity. Be sure to handle these assemblies in an ESD-safe manner. Where possible, the assembles should be replaced in an ESD-safe location. If unable to do so, take ESD-safe precautions when replacing these. Must be transported in ESD-safe containers. The packaging of the assemblies must be ESD-safe. If possible, use the packaging of the spare part or use ESD-safe packaging.

Fitting of spare parts

Observe the above specifications when installing the spare part. Ensure the part and all components are properly installed. Return the cables to the original state before putting into service. When in doubt, contact the manufacturer for additional information.

Returning old electrical appliances for disposal

If you wish to return an electrical product from Bühler Technologies GmbH for proper disposal, please enter "WEEE" in the RMA number box. Please attach the fully completed decontamination declaration form for transport to the old appliance so that it is visible from the outside. You can find more information on the disposal of old electrical appliances on our company’s website.

Bühler Technologies GmbH, Harkortstr. 29, D-40880 Ratingen
Tel. +49 (0) 21 02 / 49 89-0, Fax: +49 (0) 21 02 / 49 89-20
E-Mail: service@buehler-technologies.com
Internet: www.buehler-technologies.com